TERMOSTATICI - THERMOSTATIC MIXERS

SIXTY

Art. 0G8.051.01.1QT.10Q.00R.5

Incasso doccia termostatico con chiusura
Thermostatic built-in mixer with shut off

Linea ***SIXTY***
SIXTY Line

OPERATING SPECIFICATIONS

Hot water supply temperature:
Maximum: 85°C - Advisable: 65°C
Minimum: 5°C
Operating Pressure
Maximum: 5 Bar
Minimum: 0.1 Bar

FINITURE - FINISHES
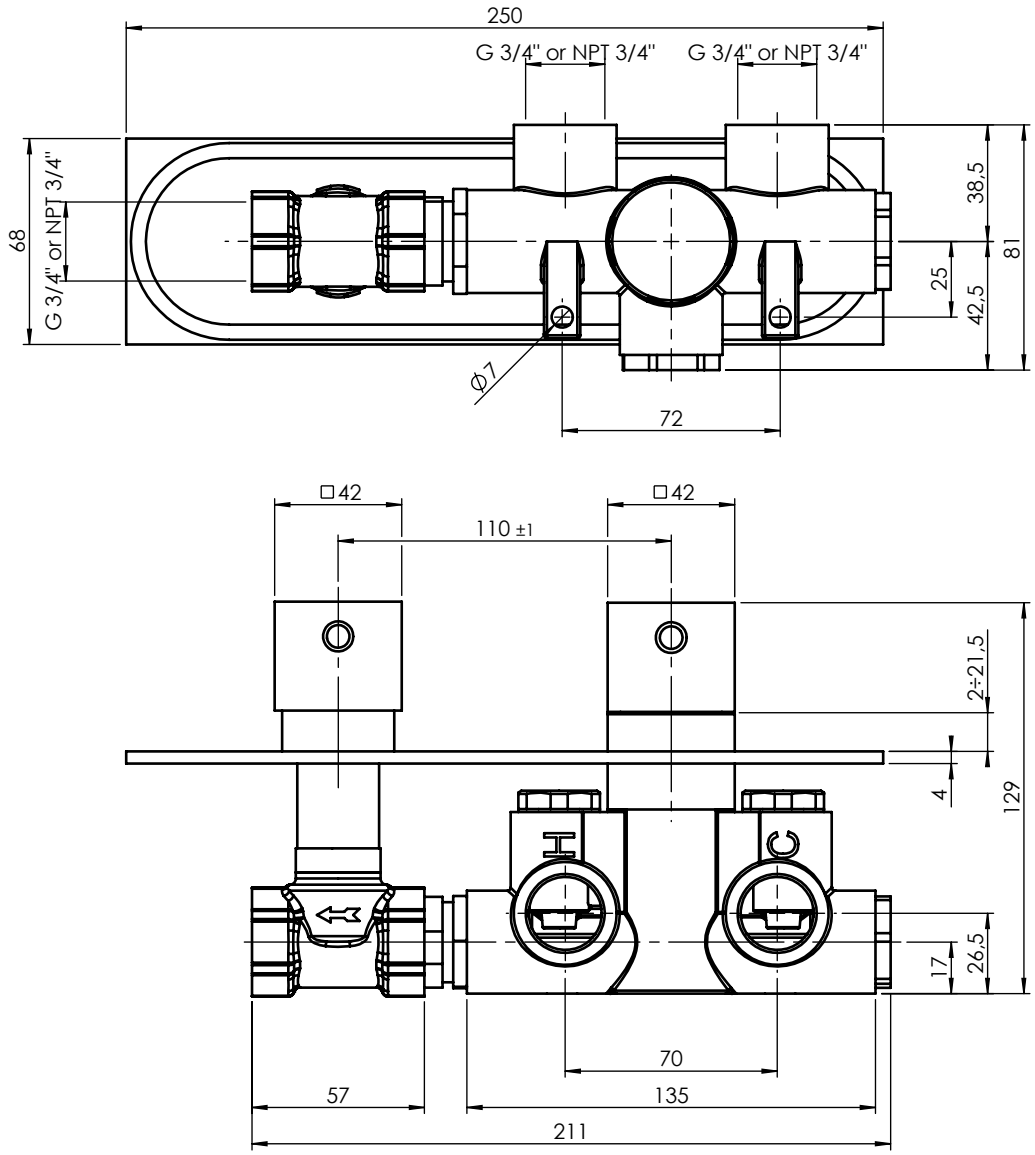
Disegno Tecnico - Technical Drawing