TERMOSTATICI - THERMOSTATIC MIXERS

SIXTY

FINITURE - FINISHES

Chrome
Black Chrome
White Matte
Black Matte
Gold 24kt
Gold 18kt
Pink Gold
Bronze
Copper
Brushed Copper
Brushed Nickel
Bright Nickel
Aged Iron
Brushed Gold
Natural Brass PVD
Brushed Brass PVD
Brushed Copper PVD

0G8.090.01.10T.10H.00T.5 + Kit P.304

0G8.090.01.10T.10H.00T.5

Incasso doccia termostatico con collettore due uscite.
Senza gruppo supporto doccetta, doccetta e flessibile
Thermostatic built-in mixer with flow through valve 2 outlets.
Without hand shower holder, hand shower and flex hose

Kit P.304

Gruppo supporto doccetta, doccetta e flessibile
Hand shower holder, hand shower and flex hose

OPERATING SPECIFICATIONS

Hot water supply temperature:
Maximum: 85°C - Advisable: 65°C
Minimum: 5°C
Operating Pressure
Maximum: 5 Bar
Minimum: 0.1 Bar
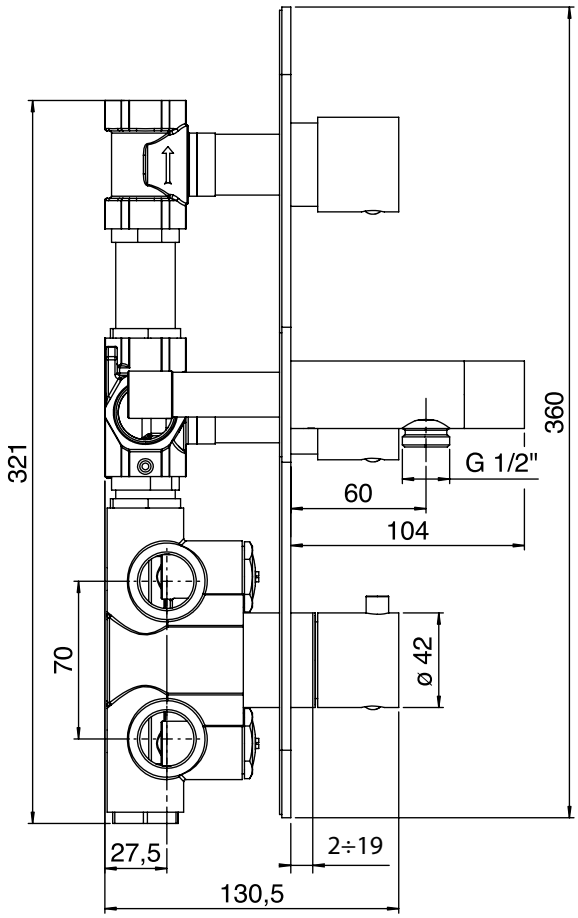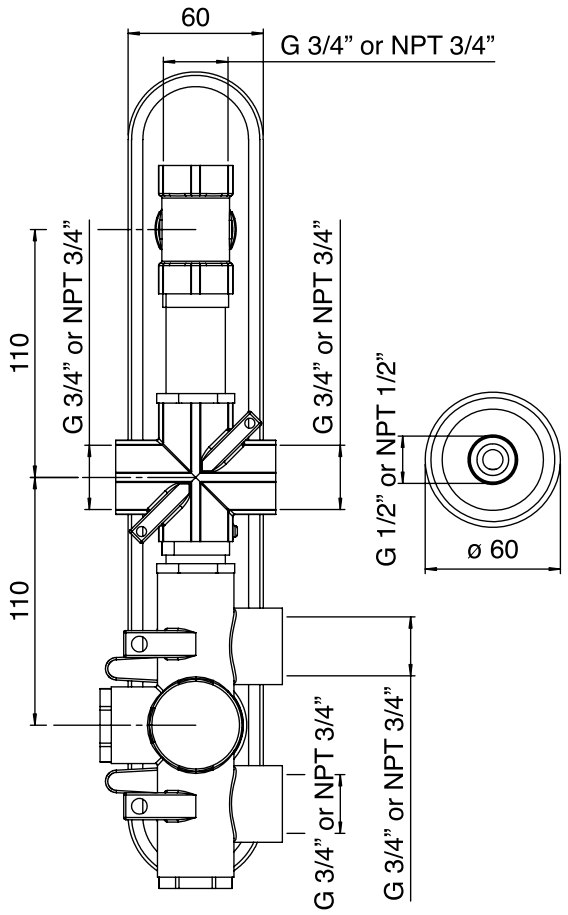
Disegno Tecnico - Technical Drawing